PRN 500 Programmable Circular Sewing Unit

The PRN 500 Programmable Circular Sewing Unit was specially designed for the sewing of heavy disk-shaped textiles. It consists of the sewing head, a commercial single-needle double-lockstitch sewing machine, and an additional material guiding device.

View of the sewing unit; material in changing position

Similar to a grinding wheel, the material to be sewn is centred on an axle ("clamping head") and fixed for easy removal by means of washers and nut. Two servo axles, the movements of which are determined by computer numerical control and synchronized with the needle movement of the sewing machine, position the material precisely relative to stitch formation. The course of the seam results from a rotary movement and a longitudinal movement at right angles to the sewing direction being overlaid (cf. schematic sketch).

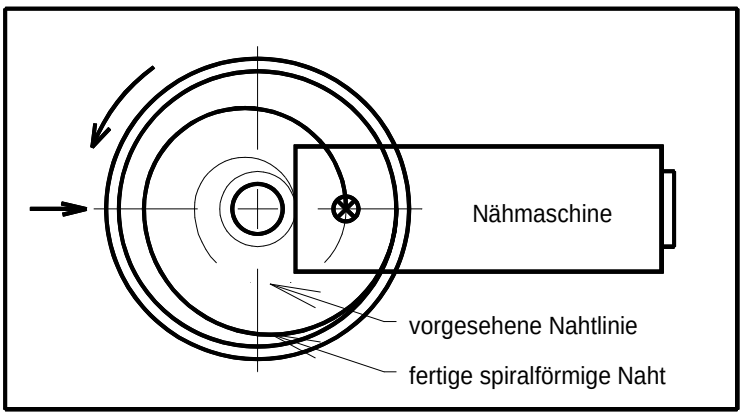

Nähmaschine =
sewing machine

vorgesehene Nahtlinie =
planned seam

fertige spiralförmige Naht =
complete spiral seam

Principle scheme of the sewing unit

For changing the material to be sewn, the guiding device can be moved to a position away from the stitching area so that the completed material can be easily removed and the new material precisely positioned and fixed.

Control unit, control switches and a menu-guided operating panel are accommodated in a switch cabinet. The driving and control arrangement permits to produce any seam patterns with high reproducibility of sewing-technological parameters.

Application example:

Double-lockstitch seams favourably placed in disk-shaped composites enable stabilization of the fabric pile, increase in strength and protection against delamination. The PRN 500 Programmable Circular Sewing Machine ensures the necessary high stitch-positioning accuracy and enables the production of a large variety of seam shapes, such as circles, spirals and similar centre-oriented seam shapes, by means of variable parameters like length of stitch, distance between seams and direction of sewing.

In a further development stage the practically realizable shapes of seam were completed by steep spirals, the sewing of smaller inside diameters is possible, too.

Specifications:

- single-needle double-lockstitch (stitch type 301 DIN 61400)
- dimensions (length * width * height): sewing unit : 1670 * 770 * 900 mm
  switch cabinet: 800 * 400 * 2000 mm
- size of material to be sewn: 70 - 500 mm
- thickness of material to be sewn: 15 mm maximally

Variable parameters:

- shape of seam: centric circles, spirals
- number of stitches: depending on parameters; approx. 300 stitches/min maximally
- distance between seams: 0 to 250 mm
- length of seam: 5 to 15 mm

The PRN 500 sewing unit was developed by our research organisation on behalf of, and in co-operation with, the Institute for Textile and Clothing Technology (Professorship of Ready-made Technology) at the Technische Universität Dresden.

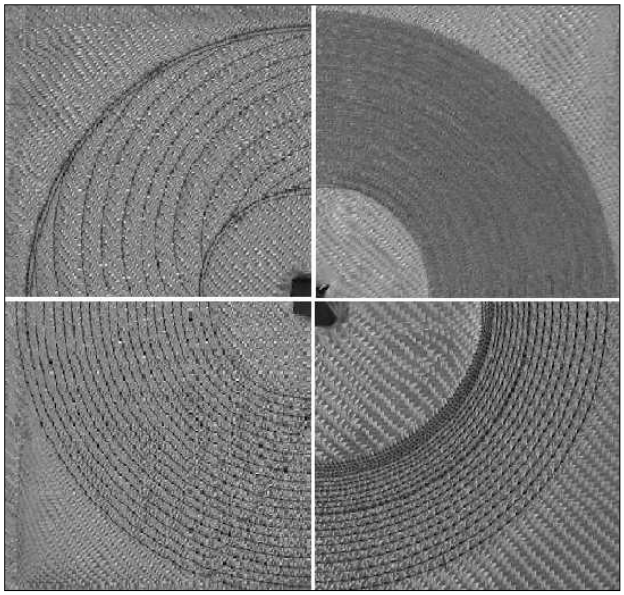

Selected seam shapes

Cetex Institut für Textil- und Verarbeitungsmaschinen gemeinnützige GmbH
an der Technischen Universität Chemnitz

Altchemnitzer Str. 11
D-09120 Chemnitz

Tel.: +49 (0) 371 / 52 77 – 0
Fax: +49 (0) 371 / 52 77 – 100

E-Mail: fue@cetex.de
Internet: http://www.cetex.de